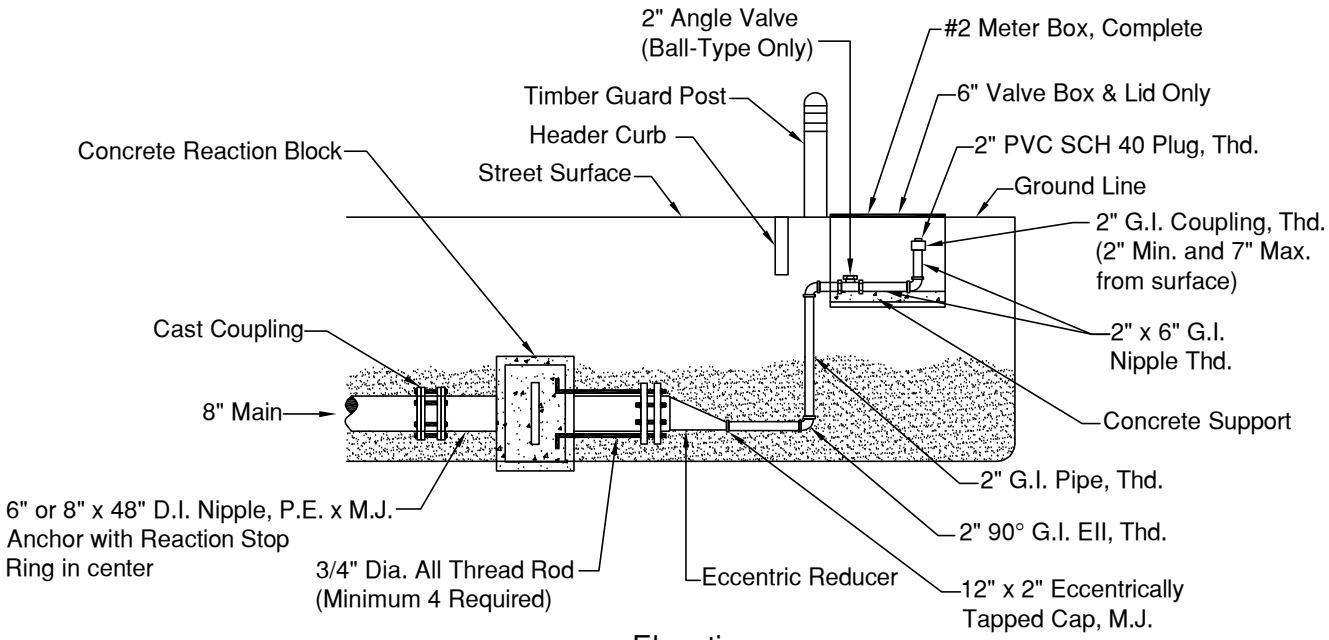

Elevation

2" PERMANENT BLOW OFF ASSEMBLY ON 8" P.V.C. OR D.I. MAINS

Not To Scale

NEW BRAUNFELS UTILITIES WATER SYSTEMS ENGINEERING	DRAWN BY: *JD Amaro* APPROVED BY:	STANDARD DRAWING:	***2" PERMANENT BLOW OFF ASSEMBLY ON 8" P.V.C. OR D.I. MAINS***		
		UPDATED: *5-6-03*	SCALE: *N.T.S.*	SHEET: *1 OF 1*	DRAWING NO. *251*