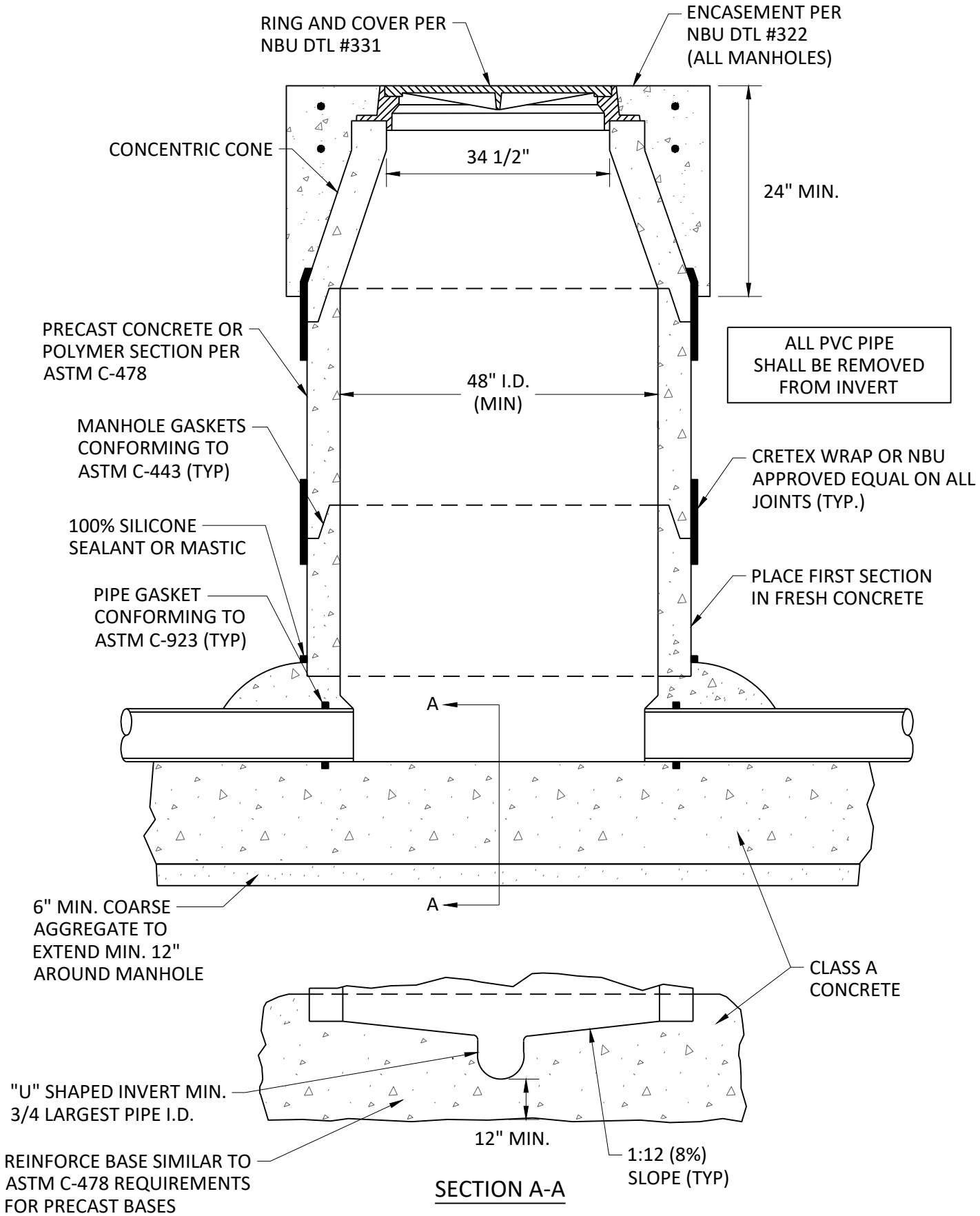

SECTION A-A

NEW BRAUNFELS UTILITIES
WATER SYSTEMS ENGINEERING

DRAWN BY: EWL	STANDARD DRAWING: WASTEWATER MANHOLE ON CAST IN PLACE FOUNDATION			
APPROVED BY: A. WILLARD				
DRAWING DATE: 2/1/24	UPDATED:	SCALE: N.T.S.	SHEET: 1 OF 1	DRAWING NO. 327